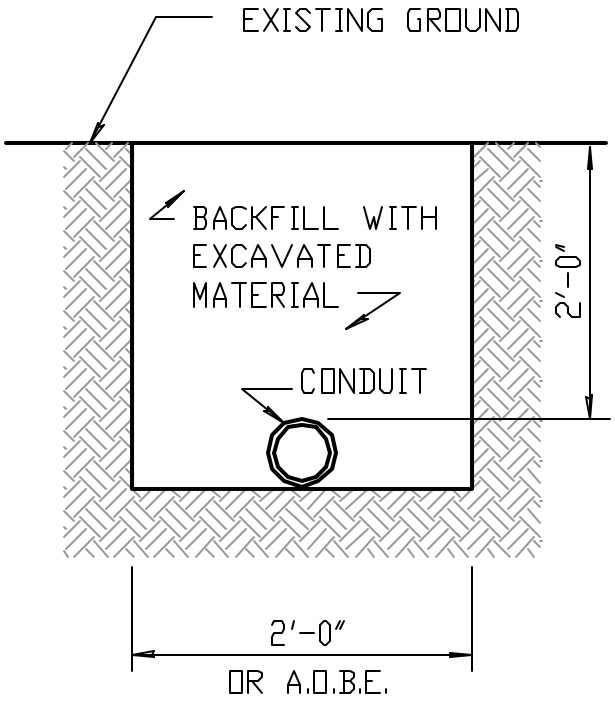

EXCAVATION IN EARTH

TRAFFIC CONDUIT INSTALLATION

NOT TO SCALE

01/11/00

REVISED